United States Senate Desk

Desk # 59

Front View

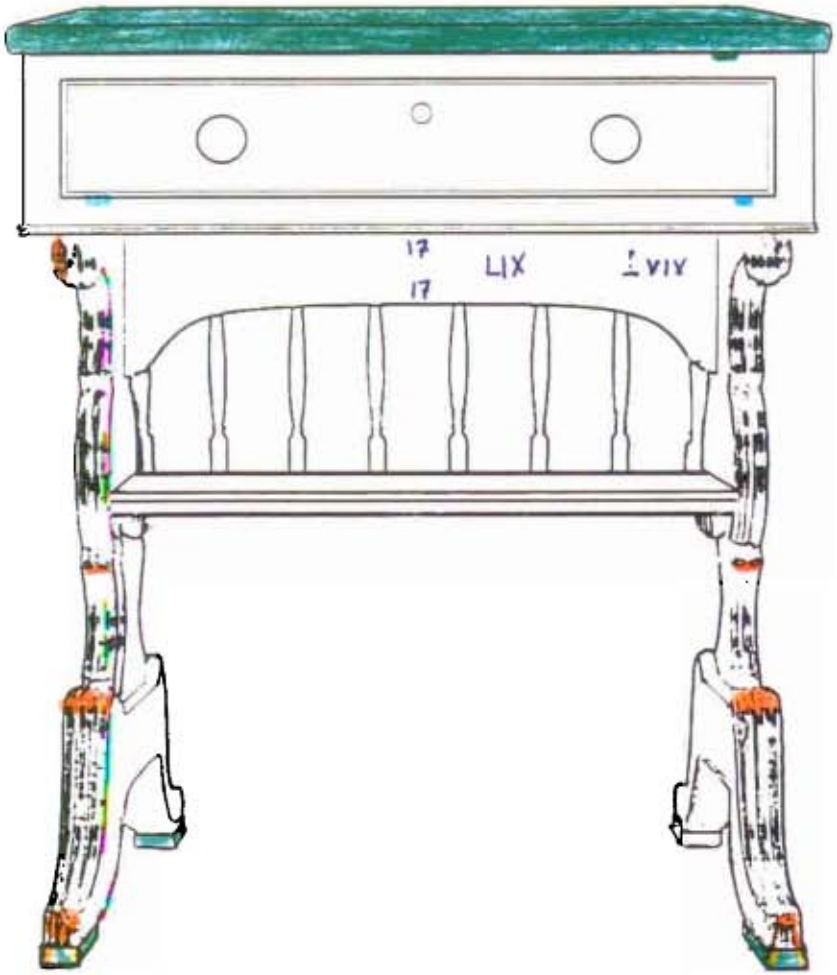

Rear View

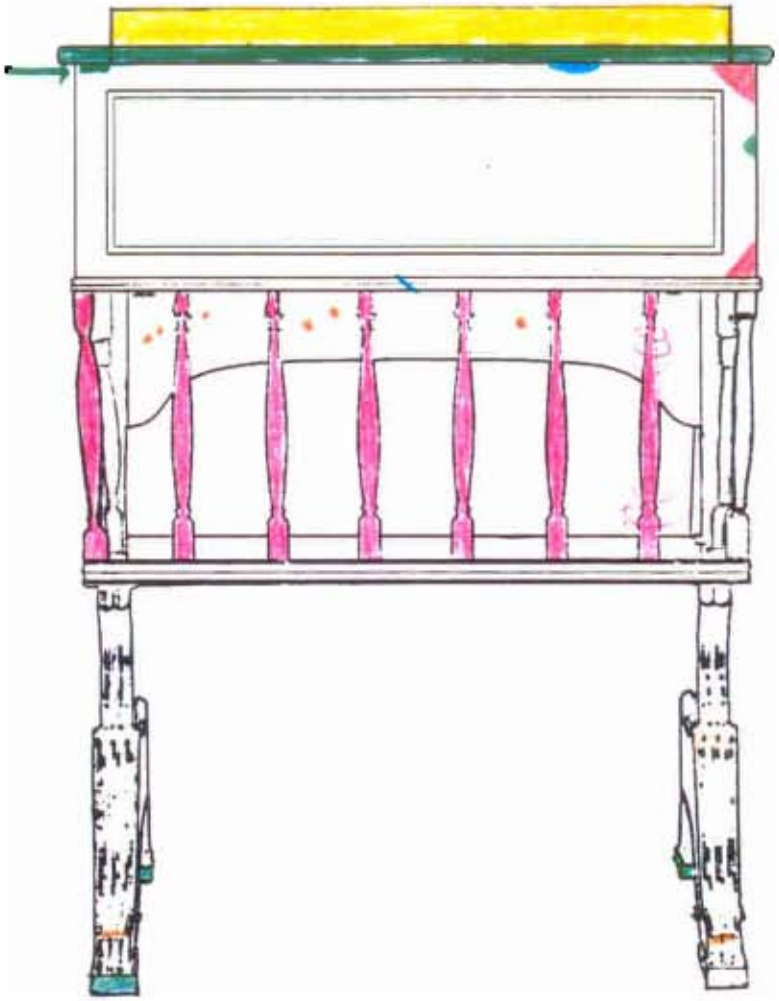

- Loose/broken/delaminated
- Damage/wear/hole
- Previous repair
- Replaced piece
- Missing
- Spindles not original to desk
- Add-ons
- Inscriptions

United States Senate Desk

Desk # 59

Right Side

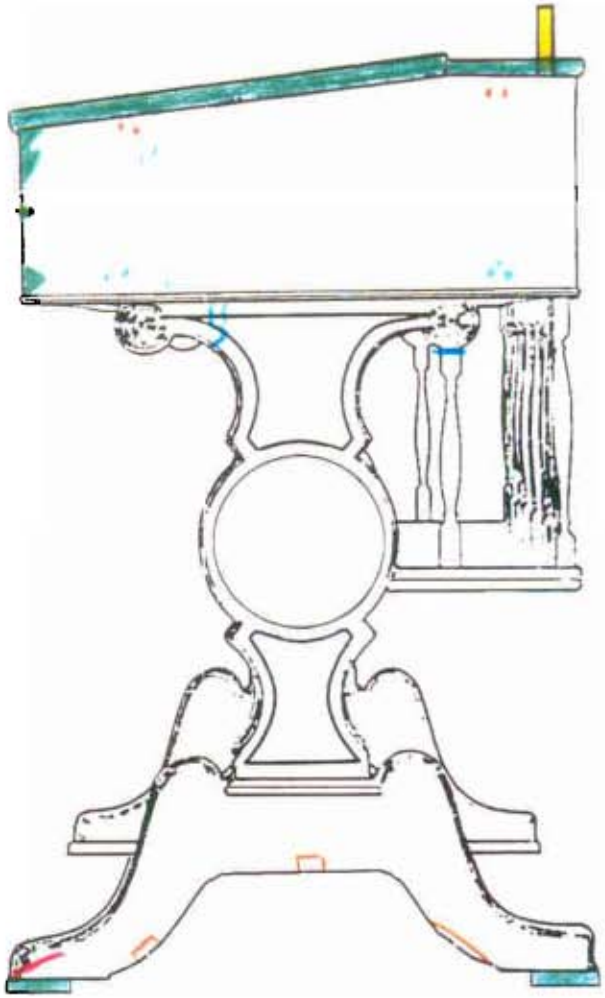

Left Side

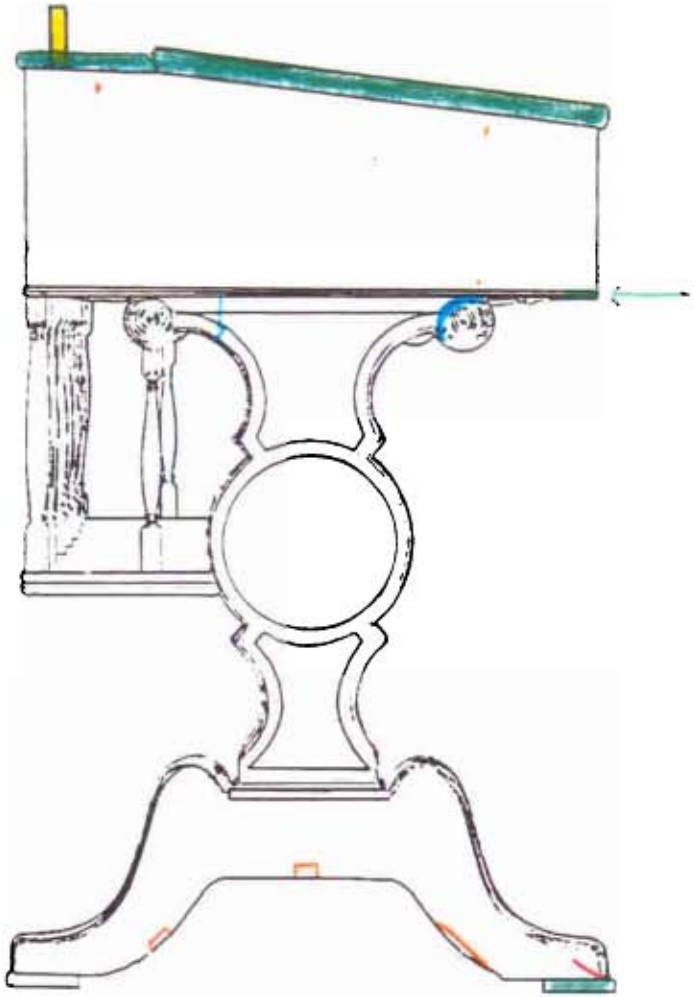

- Loose/broken/delaminated
- Damage/wear/hole
- Previous repair
- Replaced piece
- Missing
- Spindles not original to desk
- Add-ons
- Inscriptions

United States Senate Desk

Desk # 59

Top

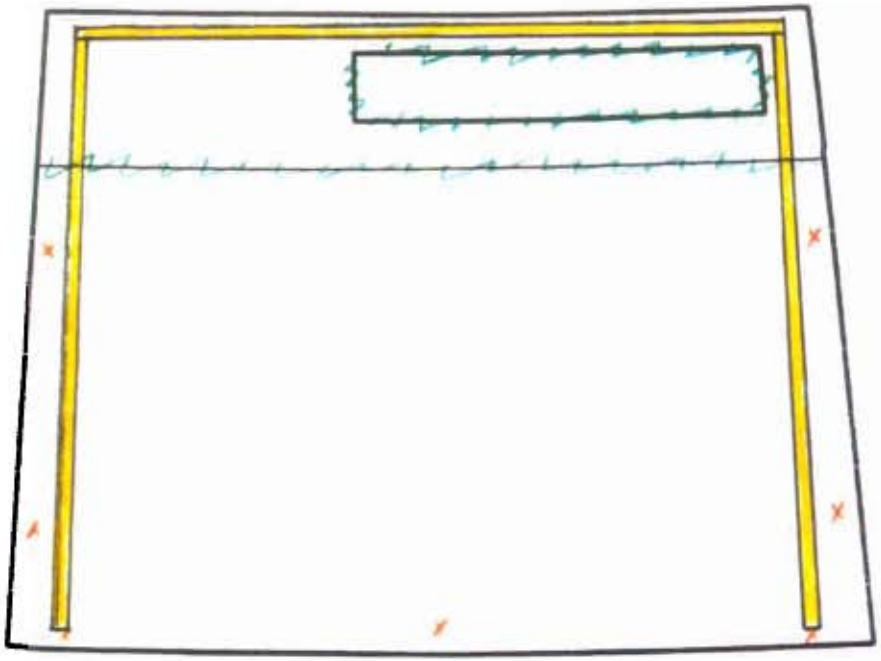

- Loose/broken/delaminated
- Damage/wear/hole
- Previous repair
- Replaced piece
- Missing
- Spindles not original to desk
- Add-ons
- nscriptions

United States Senate Desk

Desk # 59

Bottom

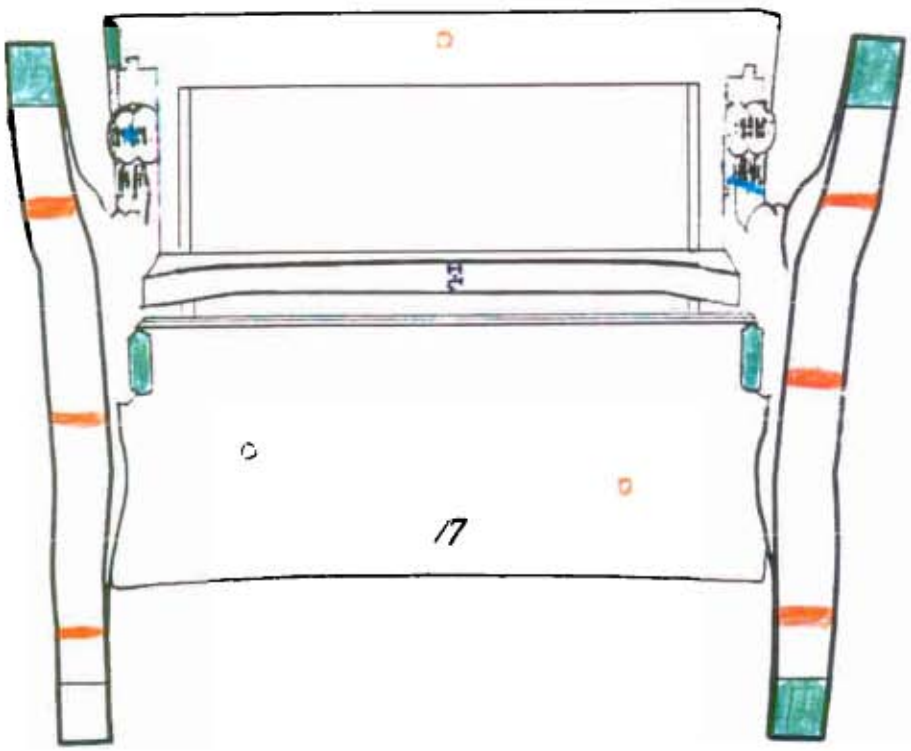

Bottom

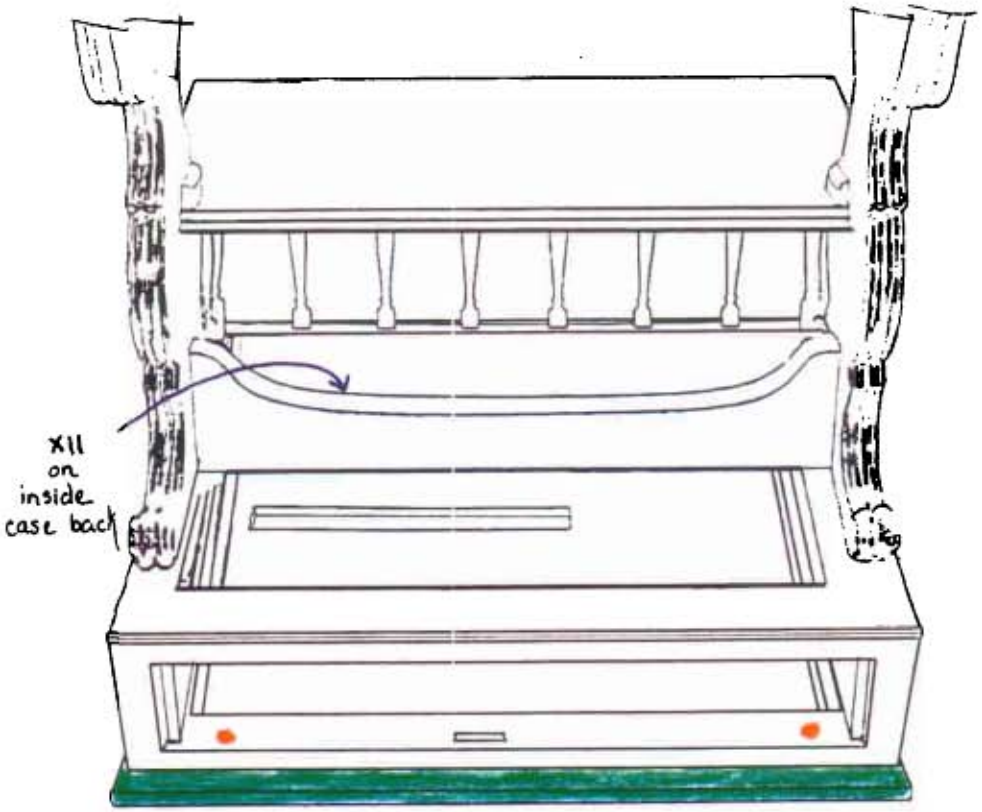

- Loose/broken/delaminated
- Damage/wear/hole
- Previous repair
- Replaced piece
- Missing
- Spindles not original to desk
- Add-ons
- Inscriptions

United States Senate Desk

Desk # 59

Drawer Front. Outer Surface

Rear Surface of Drawer Front

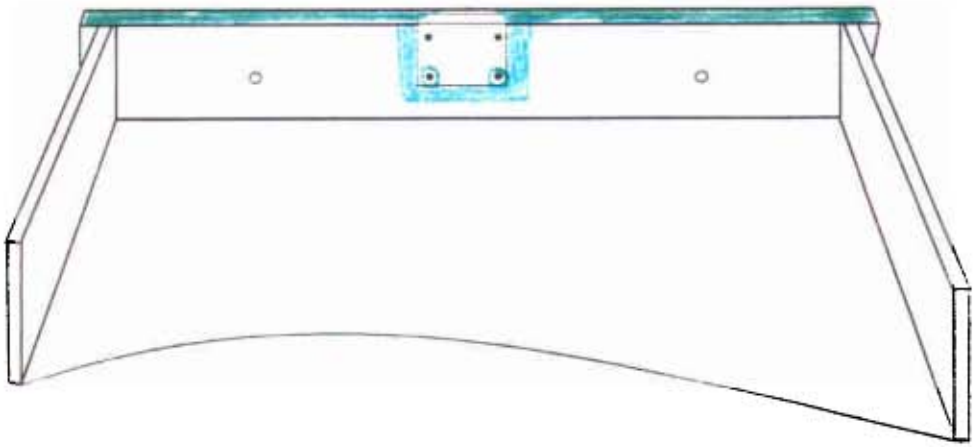

- Loose/broken/delaminated
- Damage/wear/hole
- Previous repair
- Replaced piece
- Missing
- Spindles not original to desk
- Add-ons
- Inscriptions

United States Senate Desk

Desk # 59

Inside urface of Left Drawer Side

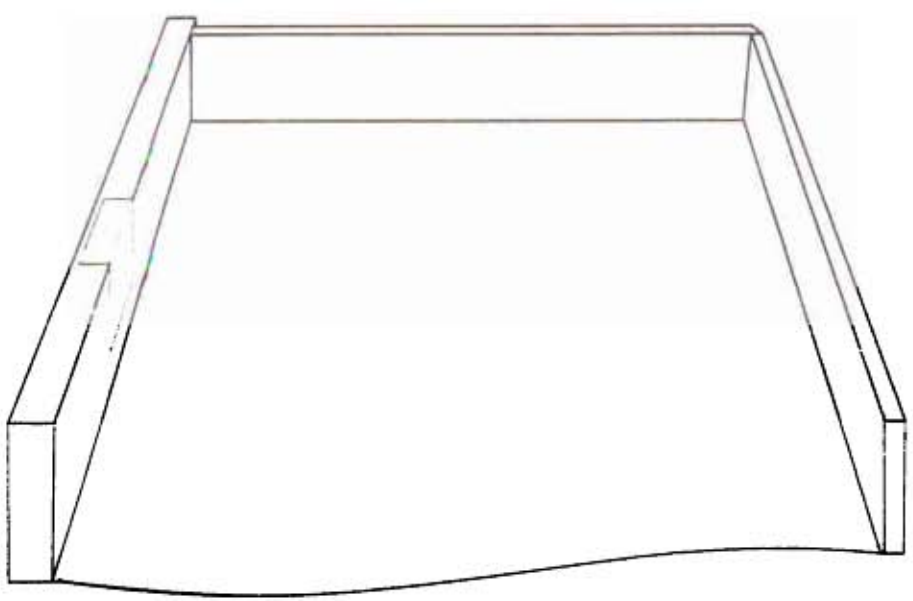

Inside Surface of Right Drawer Side

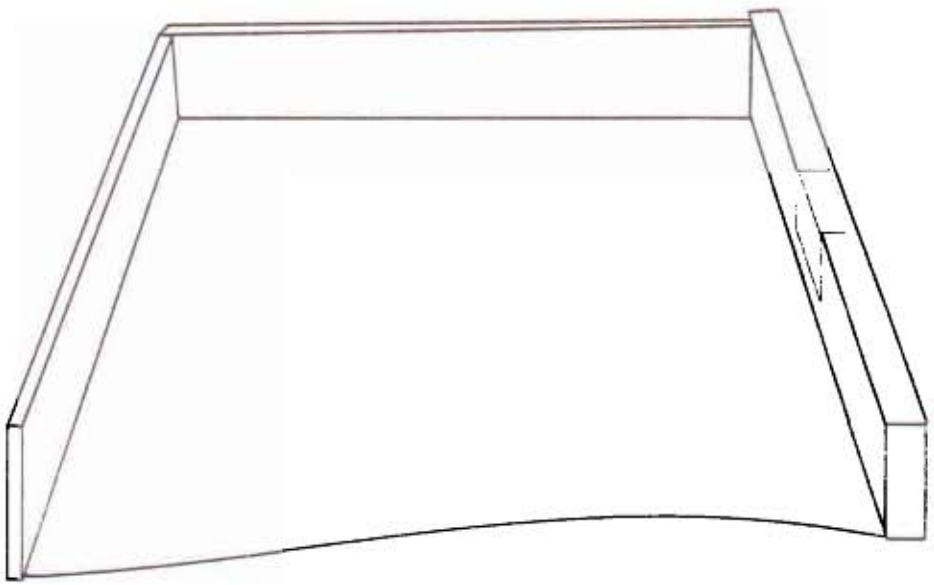

- Loose/broken/delaminated
- Damage/wear/hole
- Previous repair
- Replaced piece
- Missing
- Spindles not original to desk
- Add-ons
- Inscriptions

United States enate Desk

Desk # 59

Rear Surface of Drawer Back

Front Surface of Drawer Back

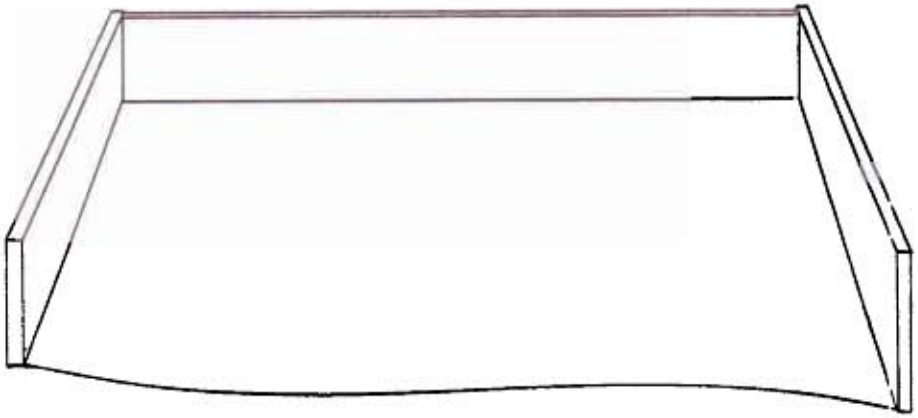

- Loose/broken/delaminated
- Damage/wear/hole
- Previous repair
- Replaced piece
- Missing
- Spindles not original to desk
- Add-ons
- Inscriptions

United States Senate Desk

Desk # 59

Upper Surface of Drawer Bottom

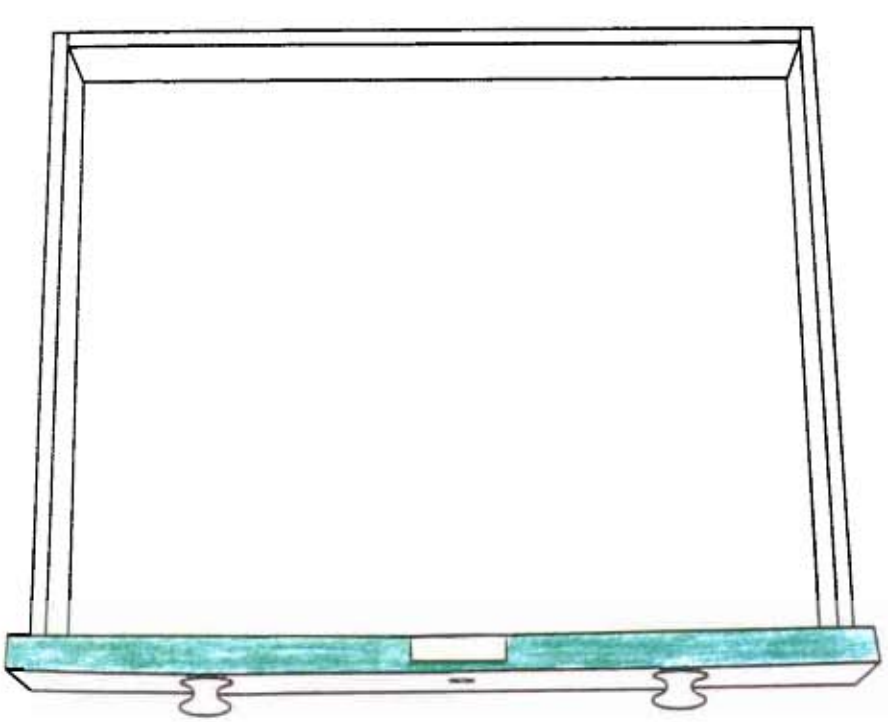

Lower Surface of Drawer Bottom

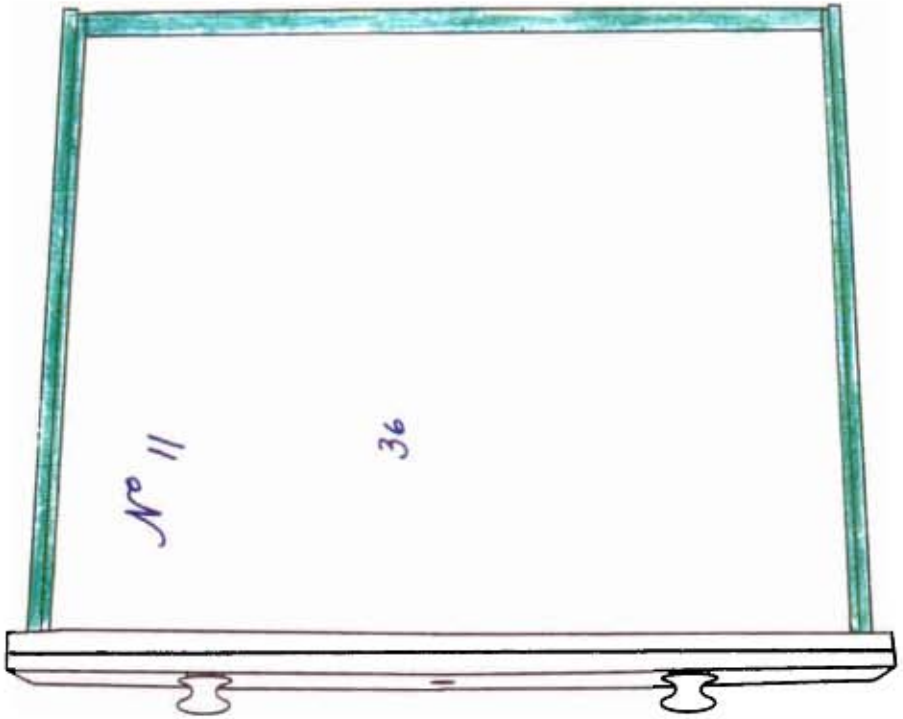

- Loose/broken/delaminated
- Damage/wear/hole
- Previous repair
- Replaced piece
- Missing
- Spindles not original to desk
- Add-ons
- Inscriptions

United States Senate Desk

Desk # 59

Outside Surface, Right Drawer Side

Outside Surface, Left Drawer Side

- Loose/broken/delaminated
- Damage/wear/hole
- Previous repair
- Replaced piece
- Missing
- Spindles not original to desk
- Add-ons
- Inscriptions